# 127-054-12

## THIS CABLE IS USED FOR:

MARC Comm-Troller to MARC 137-001 FSK Modem
MARC Comm-Master to MARC 137-001 FSK Modem

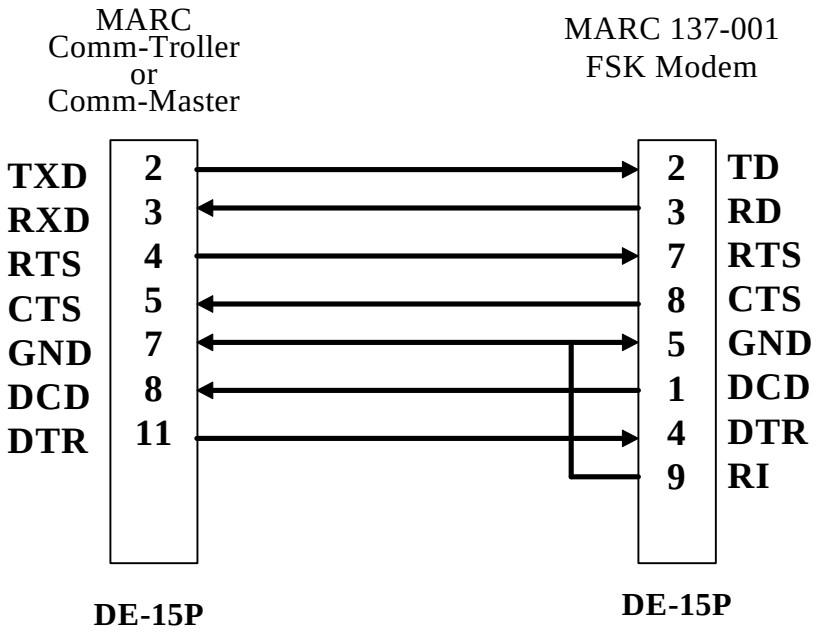


**MARC Cable Ass'y #127-054-XX**