THIS CABLE IS USED FOR:

MARC ONMII-COMM TO Caterpillar CCM

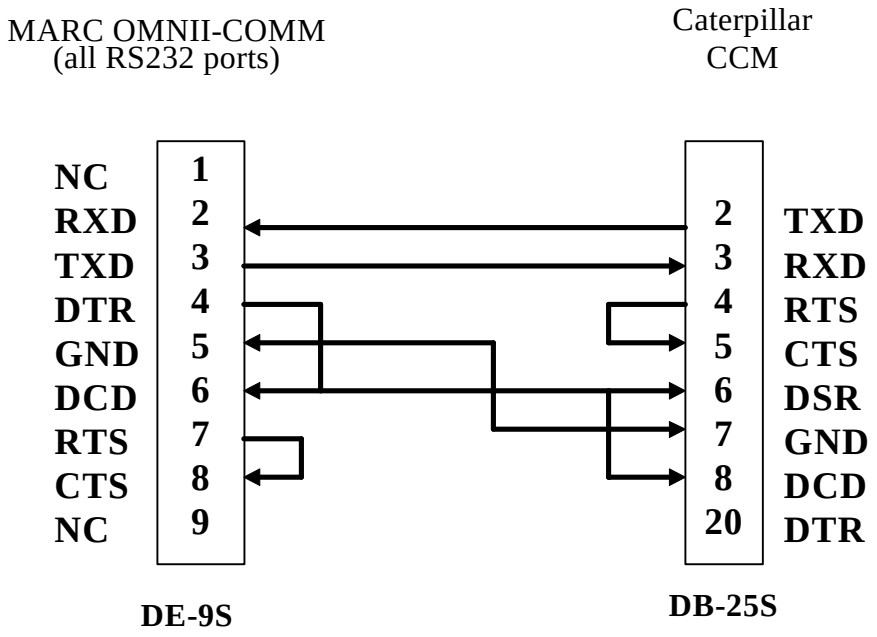

MARC Omnii-Comm to Caterpillar CCM Cable Assembly